Part Number: 63464-0002
Status: Active
Description: Conductor Anvil

Documents:
RoHS Certificate of Compliance (PDF)

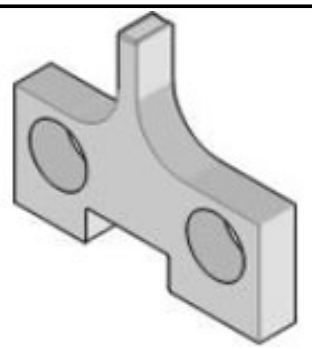

Series
image - Reference only

General

Product Family	Application Tooling
Series	T1118
Comments	See Tooling Specification (PDF) Above
Function	Cutter
Geographic Area	Global
Level of Automation	Semi-Automatic
More Detailed Tech Information	applicationtooling@molex.com
Product Name	N/A
Survey	www.molex.com//review/apptool_survey.html
Tool Type	Anvil
UPC	822348741625

Material Info

Reference - Drawing Numbers

Application Tooling Documents	ATS-STANDARD-PARTS

EU RoHS **China RoHS**
Compliance Status
Not Reviewed
REACH SVHC
Not Reviewed
Low-Halogen Status
Not Reviewed

Need more information on product environmental compliance?

Email productcompliance@molex.com
For a multiple part number RoHS Certificate of Compliance, click here

Please visit the Contact Us section for any non-product compliance questions.

Search Parts in this Series
T1118Series

Use With
63883-7000 , 63883-7070 , 63883-7200 , 63883-7270 , 63885-7000 , 63885-7070