THIS DOCUMENT IS THE PROPERTY OF KEYSTONE ELECTRONICS CORP. AND SHALL NOT BE REPRODUCED, DISTRIBUTED OR USED AS A BASIS FOR MANUFACTURE WITHOUT PRIOR WRITTEN PERMISSION FROM KEYSTONE ELECTRONICS CORP.

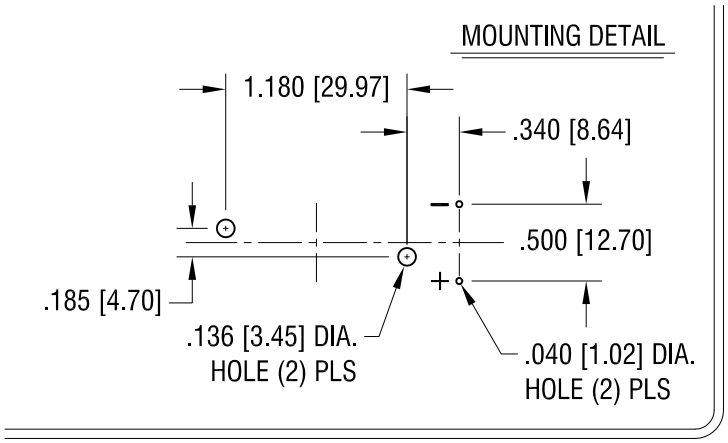

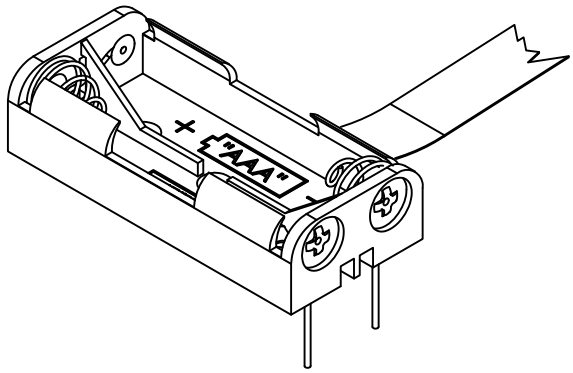

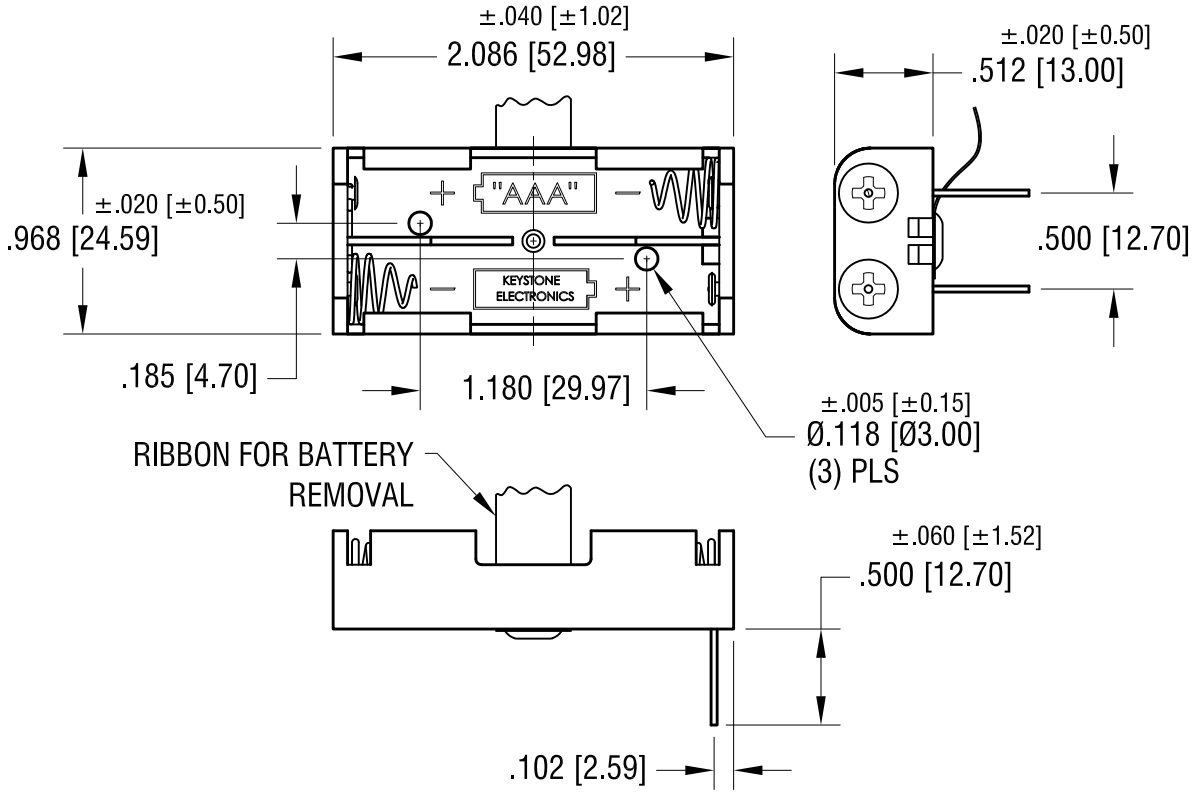

NOTE:

1. HOLDER: MAT'L: POLYPROPYLENE
   SPRING: MAT'L: MUSIC WIRE, .024 [0.60] DIA.
   PC TERMINALS: MAT'L: BRASS, .032 [0.81] DIA.
   RIBBON: MAT'L: NYLON, RED

DATE	DESCRIPTION	REV.
3.28.12	CHANGE AS PER ECN 12-038	B
8.24.05	CHANGE AS PER ECN 05-061	A

KEYSTONE ELECTRONICS CORP.

www.keyelco.com • ASTORIA, N.Y. 11105-2017 • Tel (718) 956-8900

PART NAME	PC BATTERY HOLDER (2) 'AAA' W/ RIBBON		
MATERIAL	AS NOTED		
FINISH	NICKEL PLATE	DRN BY BOONE	DATE 12.1.03
		APP'D LN	SCALE 1X
TOLERANCES INCH [MM] DECIMAL ± .015 [± 0.38] ANGULAR ± 1° UNLESS OTHERWISE SPECIFIED	CODE C/M	DWG NO. 2468RB	