Compact Size Digital Pressure Sensor For Gas

DP4 SERIES

Related Information
■ General terms and conditions..... F-17
■ Glossary of terms..... P.1373~
■ Sensor selection guide ..... P.661~
■ General precautions P.1405

panasonic-electric-works.net/sunx

Conforming to EMC Directive

Recognition

* Passed the UL 991 Environment Test

* UL 61010C-1 compatible, Passed the UL 991 Environment Test based on SEMI S2-0200. [Category applicable for semiconductor manufacturing: TWW2, Process Equipment] [Applicable standards: UL 61010C-1] [Additional test / evaluation standards as per intended use: UL 991, SEMI S2-0200]

LCD Digital

Automatic sensitivity setting

New shape makes it most suitable for panel mounting

Can be mounted on a DIN rail

The sensor can be mounted even on a 35 mm 1.378 in width DIN rail by using the optional DIN rail mounting bracket (**MS-DP-2**). It can be mounted in a narrow space inside of your device.

Mountable from four different directions

Light-weight, compact design

A compact form specifically designed for mounting on an equipment panel. It only uses half the space of our conventional product and provides the light weight of just 30 g (cables excluded).

Can be mounted closely

Even when you use more than one sensor at the same time, you can mount them close together in one hole to save both space and man-hours.

Supplied with a simple-to-mount panel mounting bracket

A panel mounting bracket **MS-DP-1** is enclosed to enable simple mounting of the sensor onto the panel surface, thus contributing to the total cost reduction.

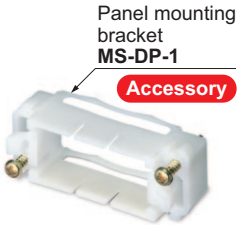

The bracket is suitable for a panel with a thickness of 1 to 6 mm 0.035 to 0.236 in.

* The panel mounting bracket **MS-DP-5** (optional) enabling the sensors to be attached to each other laterally is available.

Incorporated with the memory bank function

You can store two patterns of set values. Hence, the setup can be changed by a single touch.

APPLICATIONS

Checking IC absorption

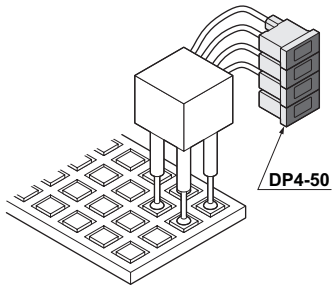

Checking degree of vacuum for vacuum molding

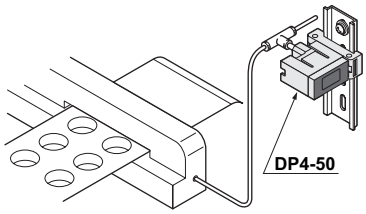

Checking reference pressure of device

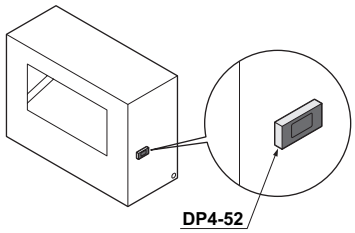

ORDER GUIDE

Type		Appearance	Rated pressure range (Note)	Model No.	Pressure port	Output
Vacuum pressure	–101 kPa type		0 to –101.3 kPa	**DP4-50**	M5 female thread	NPN open-collector transistor
				DP4-50P		PNP open-collector transistor
Positive pressure	1 MPa type		0 to 1.000 MPa	**DP4-52**		NPN open-collector transistor
				DP4-52P		PNP open-collector transistor
Compound pressure	±100 kPa type		–100.0 to 100.0 kPa	**DP4-57**		NPN open-collector transistor
				DP4-57P		PNP open-collector transistor

Note: The rated pressure range indicates the range for full product performance.

Accessory

- **MS-DP-1** (Panel mounting bracket)

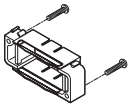

OPTIONS

Designation	Model No.	Description	
Connector	**CN-63**	Set of 10 housings and 30 connector pins	
Connector attached cable	**CN-63-C2**	Length: 2 m 6.562 ft	0.2 mm² 3-core cabtyre cable with connector Cable outer diameter: ø3.8 mm ø0.150 in
	CN-63-C5	Length: 5 m 16.404 ft	
DIN rail mounting bracket	**MS-DP-2**	For installation to 35 mm 1.378 in width DIN rail	
Sensor mounting bracket	**MS-DP-3**	Vertical mounting bracket	
	MS-DP-4	Horizontal mounting bracket	
Horizontal multiple panel mounting bracket	**MS-DP-5**	Enables the sensors to be attached to each other laterally and mounted on the panel.	

Connector

• **CN-63**

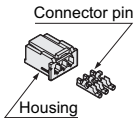

Connector attached cable

• **CN-63-C2**
• **CN-63-C5**

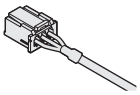

DIN rail mounting bracket

• **MS-DP-2**

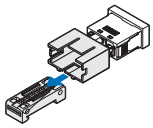

Horizontal multiple panel mounting bracket

• **MS-DP-5**

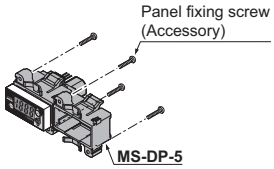

* The above illustration shows two units connected in sequence.

Sensor mounting bracket

• **MS-DP-3** • **MS-DP-4**

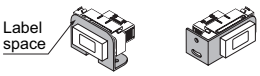

Designed with a 9 mm 0.354 in label space to enable the labeling of the sensors with a label printer (9 mm 0.354 in width) for sensor number and application data.

SPECIFICATIONS

Item / Type	Vacuum pressure		Positive pressure		Compound pressure	
	–101 kPa type		1 MPa type		±100 kPa type	
	NPN output	PNP output	NPN output	PNP output	NPN output	PNP output
Model No.	**DP4-50**	**DP4-50P**	**DP4-52**	**DP4-52P**	**DP4-57**	**DP4-57P**
Type of pressure	Gauge pressure					
Rated pressure range	0 to –101.3 kPa		0 to 1.000 MPa		–100.0 to 100.0 kPa	
Set pressure range	5.1 to –101.3 kPa {0.052 to –1.033 kgf/cm², 0.051 to –1.013 bar 0.74 to –14.70 psi, 38 to –760 mmHg 1.5 to –29.9 inHg}		–0.050 to 1.050 MPa {–0.51 to 10.71 kgf/cm² –0.50 to 10.50 bar –7.2 to 152.2 psi}		–101.3 to 105.0 kPa {–1.033 to 1.071 kgf/cm² –1.013 to 1.050 bar –14.68 to 15.22 psi}	
Pressure withstandability	490 kPa		1.470 MPa		490 kPa	
Applicable fluid	Non-corrosive gas					
Hysteresis	1 digit (however, variable in hysteresis mode)					
Repeatability	Within ±0.2 % F.S. ± 1 digit (within ±3 digits)				Within ±0.2 % F.S. ± 2 digits (within ±6 digits)	
Supply voltage	12 to 24 V DC $^{+10}_{-15}$ % Ripple P-P 10 % or less					
Current consumption	40 mA or less					
Output	<NPN output type> NPN open-collector transistor • Maximum sink current: 100 mA • Applied voltage: 30 V DC or less (between output and 0 V) • Residual voltage: 1 V or less (at 100 mA sink current) 0.4 V or less (at 16 mA sink current)		<PNP output type> PNP open-collector transistor • Maximum source current: 100 mA • Applied voltage: Same as supply voltage (between output and +V) • Residual voltage: 2 V or less (at 100 mA source current)			
Output – Utilization category	DC-12 or DC-13					
Output – Output operation	NO / NC (selectable by key operation)					
Output – Output modes	Equipped with 4 types of modes: Hysteresis mode, window comparator mode, automatic sensitivity setting mode, forced output mode (selectable by key operation)					
Output – Short-circuit protection	Incorporated					
Response time	2 ms, 16 ms, 128 ms, 512 ms or less (selectable by key operation)					
Display	3 1/2 digit LCD display (with red and green backlight) (Sampling rate: 256 ms, 512 ms, 1,024 ms selectable by key operation)					
Display – Displayable pressure range	5.1 to –101.3 kPa {0.052 to –1.033 kgf/cm², 0.051 to –1.013 bar 0.74 to –14.70 psi, 38 to –760 mmHg 1.5 to –29.9 inHg}		–0.050 to 1.050 MPa {–0.51 to 10.71 kgf/cm² –0.50 to 10.50 bar –7.2 to 152.2 psi}		–101.3 to 105.0 kPa {–1.033 to 1.071 kgf/cm² –1.013 to 1.050 bar –14.68 to 15.22 psi}	
Analog bar display	Bar display in steps of 14 % F.S. approx.					
Operation display	LCD segment is red when the output is ON, and green when the output is OFF					
Environmental resistance – Pollution degree	3 (Industrial environment)					
Environmental resistance – Protection	IP40 (IEC)					
Environmental resistance – Ambient temperature	0 to +50 °C +32 to +122 °F (No dew condensation), Storage: –10 to +60 °C +14 to +140 °F					
Environmental resistance – Ambient humidity	35 to 85 % RH, Storage: 35 to 85 % RH					
Environmental resistance – EMC	EN 61000-6-2, EN 61000-6-4					
Environmental resistance – Voltage withstandability	1,000 V AC for one min. between all supply terminals connected together and enclosure					
Environmental resistance – Insulation resistance	50 MΩ, or more, with 500 V DC megger between all supply terminals connected together and enclosure					
Environmental resistance – Vibration resistance	10 to 150 Hz frequency, 0.75 mm 0.030 in amplitude, in X, Y and Z directions for two hours each					
Environmental resistance – Shock resistance	100 m/s² acceleration (10 G approx.) in X, Y and Z directions for three times each					
Temperature characteristics	Over ambient temperature range +10 to +40 °C +50 to +104 °F: within ±2 % F.S. of detected pressure at +25 °C +77 °F Over ambient temperature range 0 to +50 °C +32 to +122 °F: within ±5 % F.S. of detected pressure at +25 °C +77 °F					
Pressure port	M5 female thread					
Material	Front case: ABS, LCD display: PET, Rear case: PBT [M5 threaded part: Brass (nickel plated)]					
Connecting method	Connector					
Suitable cable – Conductor cross-section area	0.16 to 0.32 mm² (AWG#25 to #22) (Note 2)					
Suitable cable – Lead wire diameter	ø1.2 to ø1.8 mm ø0.047 to ø0.071 in					
Suitable cable – Wire material	Tin plated, soft, twisted copper wire					
Cable length	Total length up to 100 m 328.084 ft (less than 10 m 32.808 ft when conforming to CE marking) is possible with 0.3 mm², or more, cable.					
Weight	Net weight: 30 g approx.					
Accessories	Panel mounting bracket (**MS-DP-1**): 1 set, Pressure unit label: 1 pc. Connector: 1 set (Housing: 1 pc., Connector pin: 3 pcs.)					

Notes: 1) Where measurement conditions have not been specified precisely, the conditions used were an ambient temperature of +20 °C +68 °F.
2) If the wiring is longer than 5 m 16.404 ft, use a cable with a diameter of 0.3 mm² or more.

I/O CIRCUIT AND WIRING DIAGRAMS

DP4-5□ — NPN output type

I/O circuit diagram

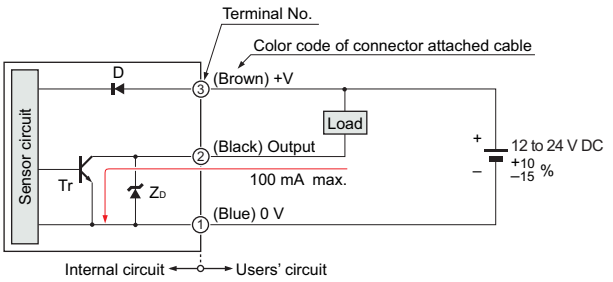

Symbols … D : Reverse supply polarity protection diode
ZD: Surge absorption zener diode
Tr : NPN output transistor

Terminal arrangement diagram

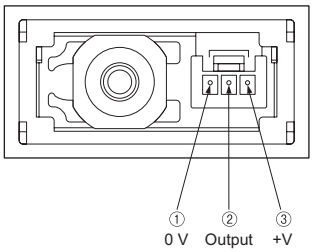

DP4-5□P — PNP output type

I/O circuit diagram

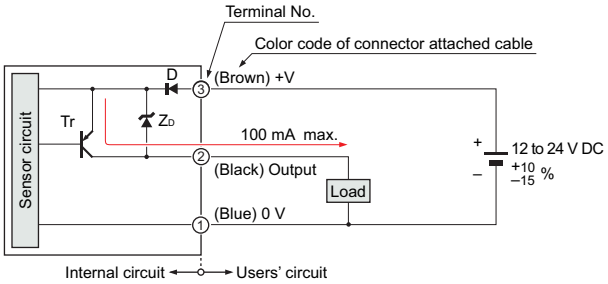

Symbols … D : Reverse supply polarity protection diode
ZD: Surge absorption zener diode
Tr : PNP output transistor

Terminal arrangement diagram

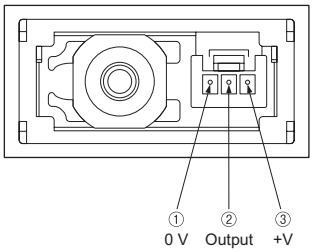

PRECAUTIONS FOR PROPER USE

Refer to General precautions.

- Never use this product as a sensing device for personnel protection.
- In case of using sensing devices for personnel protection, use products which meet laws and standards, such as OSHA, ANSI or IEC etc., for personnel protection applicable in each region or country.
- The **DP4** series is designed for use with non-corrosive gas. It cannot be used with liquid or corrosive gas.

Operation

- If setting is impossible even with pressing the MODE key, verify whether the key-protect function is enabled. Please note that pressing down on the MODE key for an extended moment will enable the key-protect function as soon as the key is released.
- If using the window comparator mode, set the pressure value so that there is a difference of 3 digits, or more, between Set Value 1 (P-1) and Set Value 2 (P-2). No output will be possible with a 0 to 2 digit difference.

Functional description

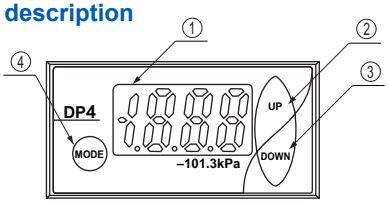

	Description	Function	
①	3 1/2 digit LCD display (with red and green backlight)	Displays measured pressure, settings, error messages and key-protect status. Red display when output is ON. Green display when output is OFF.	
②	Increment key (UP)	• In the initial setting mode and supplementary setting mode, pressing the key changes the setting item. • In the pressure value setting mode, pressing the key changes the set value. • In the sensing mode, pressing the key continuously for 4 sec., or more, displays the peak hold value.	In the sensing mode, if both keys are simultaneously pressed continuously, zero-point adjustment is done.
③	Decrement key (DOWN)	• In the initial setting mode and supplementary setting mode, pressing the key changes the set conditions. • In the pressure value setting mode, pressing the key changes the set value. • In the sensing mode, pressing the key continuously for 4 sec., or more, displays the bottom hold value.	
④	Mode selection key (MODE)	• In the pressure setting mode, pressing the key changes the setting item. In addition, if pressed for 4 sec., or more, in Set Value 1 (P-1) or Set Value 4 (P-4) setting mode, the setting mode will change to either Set Value 4 (P-4) or Set Value 1 (P-1) setting mode. • In the sensing mode, pressing the key continuously for 4 sec., or more, can set / cancel the key-protect. • In the sensing mode, pressing both Increment key and Mode selection key simultaneously changes the mode to the initial setting mode. Whereas, pressing both Decrement key and Mode selection key simultaneously changes the mode to the supplementary setting mode.	

PRECAUTIONS FOR PROPER USE

Refer to General precautions.

Conditions in use for CE conformity

- The **DP4** series is a CE conformity product complying with EMC Directive. The harmonized standard with regard to immunity that applies to this product is EN 61000-6-2 and the following condition must be met to conform to that standard.

Conditions

- The sensor should be connected less than 10 m 32.808 ft from the power supply.
- The signal line to connect with this sensor should be less than 30 m 98.425 ft.

Setting

- The conditions which are set are stored in an EEPROM. Kindly note that the EEPROM has a life span and its guaranteed life is 100,000 write operation cycles.

Forced output mode

- In the initial setting mode, if the output mode is set to the forced output mode (0), the output is forcibly maintained at OFF level in the sensing mode, irrespective of Set Value 1 to 3 (P-1 to P-3).
  Further, if the keys are operated as per the procedure given below, the output can be forcibly switched either ON or OFF without applying pressure at the pressure port. This is convenient for an operation check of the comparative output or for an inspection before commencing work.

[The diagram below appears when the **DP4-50**(**P**) has been used to set the display to "Digital display" (d)]

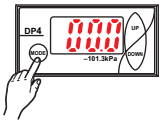

- In the sensing mode, press MODE key to change to the forced output mode.
- Whenever UP key is pressed, the output state switches to either ON and OFF alternately.
- Press MODE key to return to the sensing mode.

- Output is kept off at the point where the mode is changed from another output mode to forced output control mode (0).
- Even if output has been set to stay on during forced output control mode, it will be forcibly changed to off at the point where the mode changes back to sensing mode.

Memory bank function

- The memory bank function is a function which allows two types of output to be stored: Set Values 1 to 3 (P-1 to P-3) and Set Values 4 to 6 (P-4 to P-6).
  This make it possible to change set values quickly.

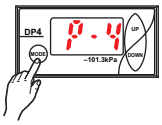

- If the MODE key is pressed in a sensing mode other than forced output mode, the mode will change to pressure value setting mode.
- After releasing the MODE key, press the MODE key again continuously until P-4 is displayed (4 sec. or more).
- Make the setting for Set Values 4 to 6 (P-4 to P-6). Set Values 4 to 6 (P-4 to P-6) correspond to Set Values 1 to 3 (P-1 to P-3) respectively.

Peak hold & bottom hold functions

- Peak hold and bottom hold functions enable the display of the peak value (maximum pressure value) and the bottom value (minimum pressure value) of the varying measured pressure. These functions are convenient for finding the pressure variation range or for determining the reference for pressure settings.

- Please note that the peak value and the bottom value data is erased when it is no longer displayed.

Key-protect function

- Key-protect is a function which prevents any unintentional change in the conditions which have been entered in each setting mode by making the sensor not to respond to the key operations.

- Since the key-protect information is stored in an EEPROM, it is not erased even if the power supply is switched off.
- Please take care to remember if the key-protect function has been set.
- When the keys are to be operated, make sure that key-protect is released.

Piping

- When connecting a commercial M5 coupling to the pressure port, hold the flat sides of the pressure port with a 13 mm 0.512 in spanner and make sure that the tightening torque is 1 N·m or less.
  If excessive tightening torque is applied, the commercial fitting may break.

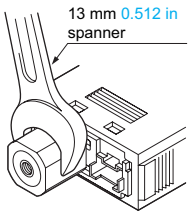

Mounting

- Install the enclosed panel mounting bracket (**MS-DP-1**) as shown in the figure below.
  The tightening torque should be 0.15 N·m or less. Further, tighten both the right and the left screw gradually and equally, so that the panel mounting bracket does not tilt.

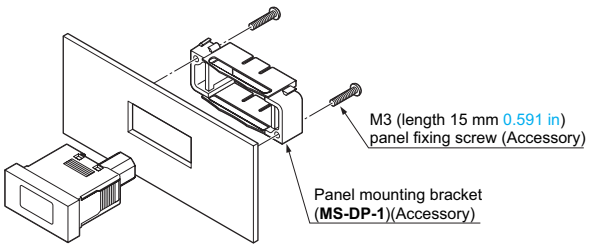

Others

- Use within the rated pressure range.
- Do not apply pressure exceeding the pressure withstandability value. The diaphragm will get damaged and correct operation shall not be maintained.
- Do not use during the initial transient time (3 sec. approx.) after the power supply is switched on.
- Avoid dust, dirt, and steam.
- Take care that the sensor does not come in direct contact with water, oil, grease, or organic solvents, such as, thinner, etc.
- Do not insert wires, etc., into the pressure port. The diaphragm will get damaged and correct operation shall not be maintained.
- Do not operate the keys with pointed or sharp objects.

DIMENSIONS (Unit: mm in)

The CAD data in the dimensions can be downloaded from our website.

DP4-5□(P) — Sensor

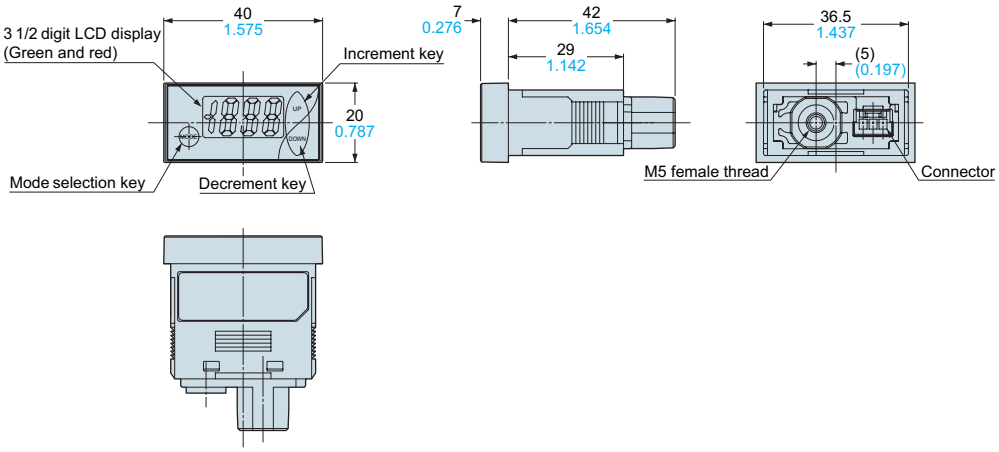

MS-DP-2 — DIN rail mounting bracket (Optional)

Assembly dimensions

<Horizontal mounting>

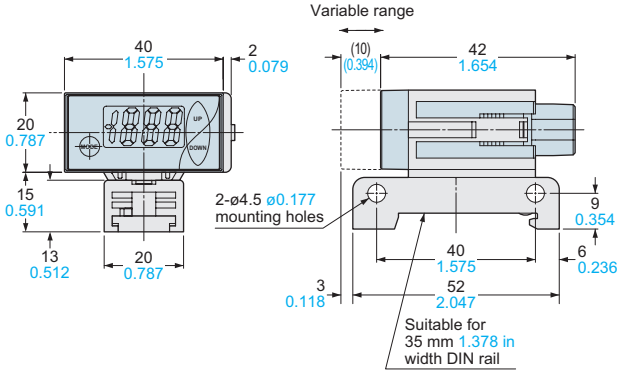

<Vertical mounting>

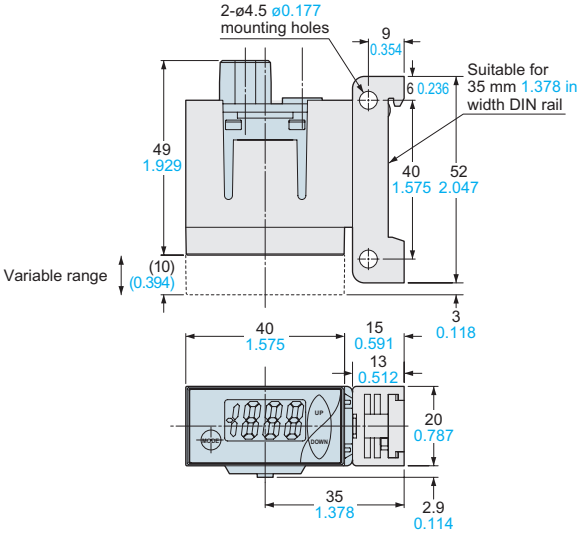

MS-DP-1 — Panel mounting bracket (Accessory)

Assembly dimensions

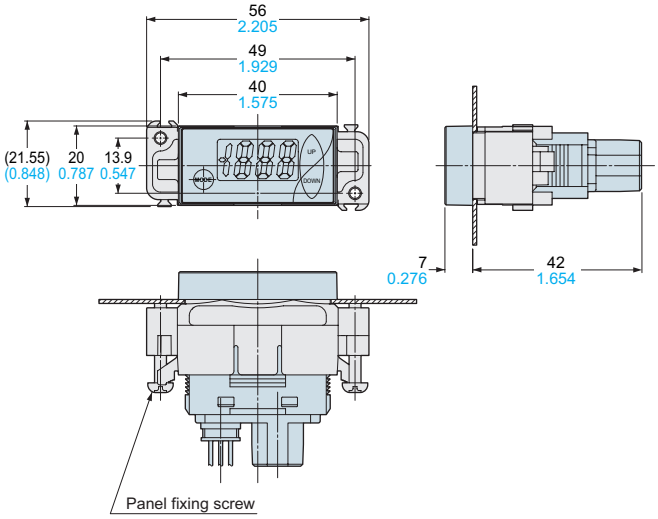

Material: POM

Two M3 (length 15 mm 0.591 in) screws for fitting are attached.

Panel cut-out dimensions

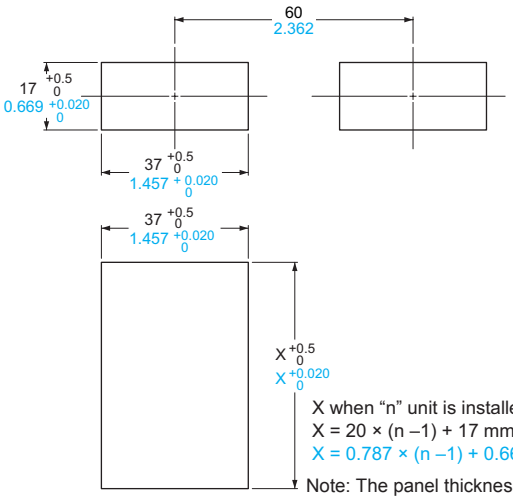

X when "n" unit is installed
X = 20 × (n –1) + 17 mm
X = 0.787 × (n –1) + 0.669 in

Note: The panel thickness should be 1 to 6 mm 0.039 to 0.236 in.

DIMENSIONS (Unit: mm in)

The CAD data in the dimensions can be downloaded from our website.

MS-DP-5 — Panel mounting bracket (Optional)

Assembly dimensions

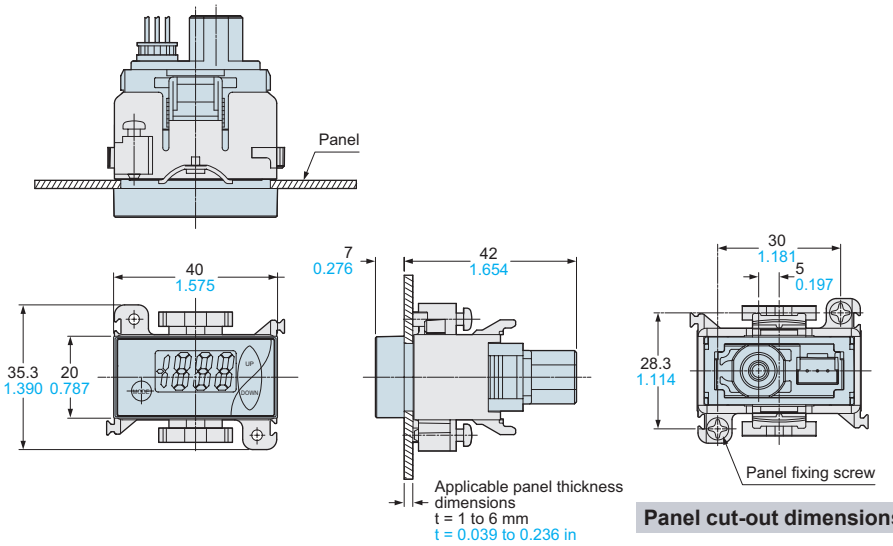

Panel cut-out dimensions

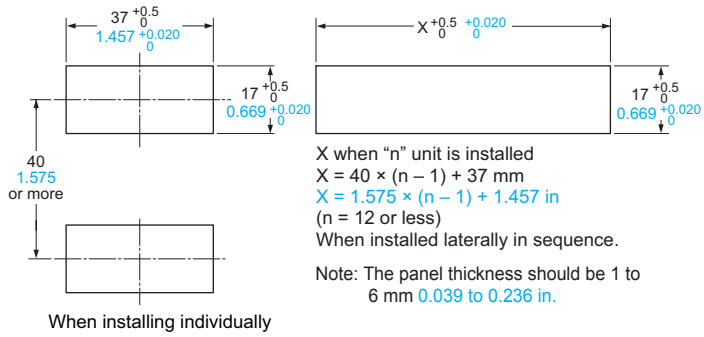

X when "n" unit is installed
X = 40 × (n – 1) + 37 mm
X = 1.575 × (n – 1) + 1.457 in
(n = 12 or less)
When installed laterally in sequence.

Note: The panel thickness should be 1 to 6 mm 0.039 to 0.236 in.

MS-DP-3 — Sensor mounting bracket (Optional)

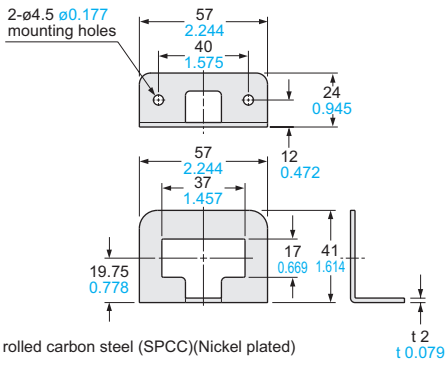

Material: Cold rolled carbon steel (SPCC)(Nickel plated)

Note: Use with the panel mounting bracket (**MS-DP-1**) included with the sensor.

MS-DP-4 — Sensor mounting bracket (Optional)

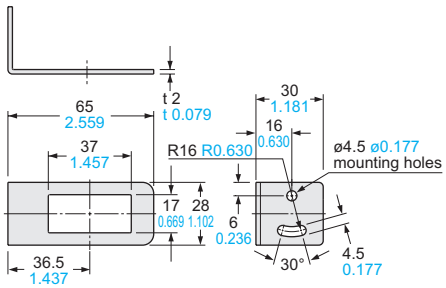

Material: Cold rolled carbon steel (SPCC)(Nickel plated)

Note: Use with the panel mounting bracket (**MS-DP-1**) included with the sensor.

CN-63 — Connector (Optional)

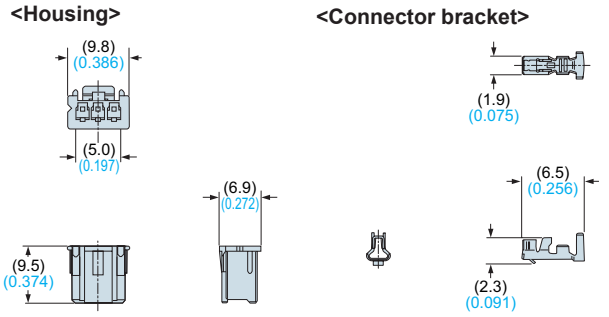

Mating connector
Connector pin: BXA-001T-P0.6 manufactured by J.S.T Mfg. Co., Ltd.
Housing: XAP-03V-1 manufactured by J.S.T Mfg. Co., Ltd.

Crimping tool
YC-692R manufactured by J.S.T Mfg. Co., Ltd.

CN-63-C2 CN-63-C5 — Connector attached cable (Optional)